Tufty-Time 20

SOFAS

2025

Patricia Urquiola

Description

Tufty-Time 20 represents the contemporary evolution of Tufty-Time, the iconic sofa system designed by Patricia Urquiola in 2005. Twenty years after its launch, the system has been reinterpreted while maintaining the essential characteristics that have made it a great success, including modularity, enveloping comfort and compositional flexibility. The volumes, padding and seat height have been redesigned to offer even greater comfort, while the introduction of a curved module expands the system's potential, giving rise to even more fluid and convivial configurations, ideal for both residential and contract spaces. Particular attention has been paid to the theme of circularity. Tufty-Time 20 is in fact fully disassemblable, ensuring that all the components can be given a second life at the end of the product's life cycle.

Technical information

Internal frame
tubular steel and steel profiles
Internal frame upholstery
flexible cold shaped polyurethane foam, polyester fibre cover
Back cushion (T60_C)
down feather and polyester fibre, pillow style typology
Feet
thermoplastic material
Cover
fabric
Service element top (TY60-TY60L)
veneered MDF wood fibre panel or aluminum plate
Service element support (TY60-TY60L)
veneered MDF wood fibre panel
Service element plate and brace (TY60-TY60L)
steel
Service element ferrules (TY60-TY60L)
felt

Technical drawings

TY108C_3

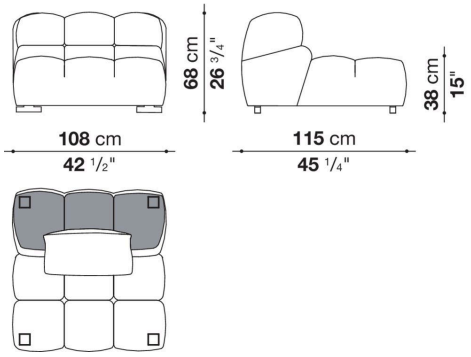

TY140CV_3

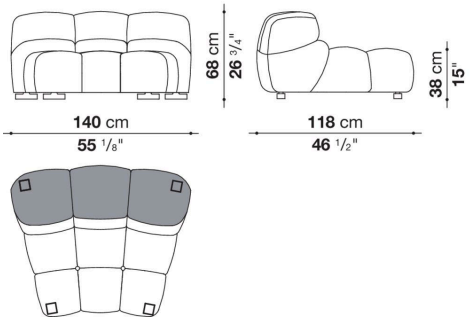

TY115BS_3

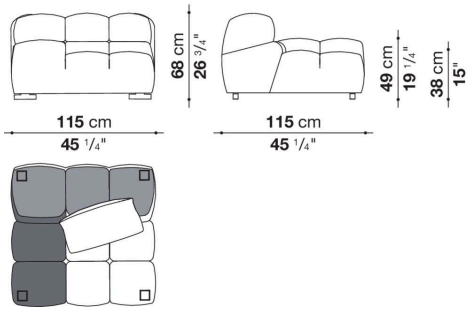

TY115BD_3

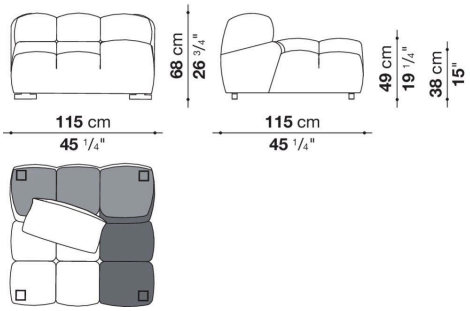

TY149BS_4

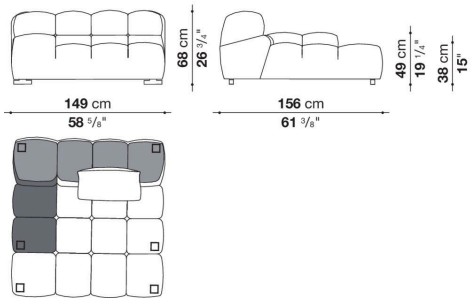

TY149BD_4

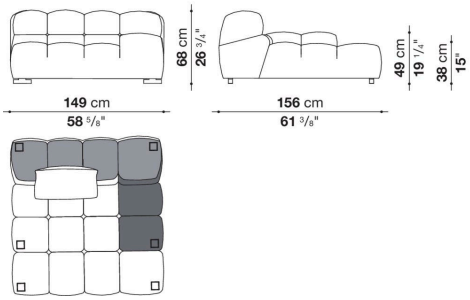

TY183BS_3

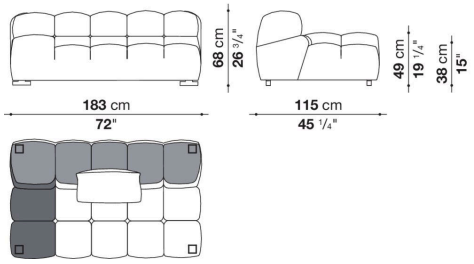

TY183BD_3

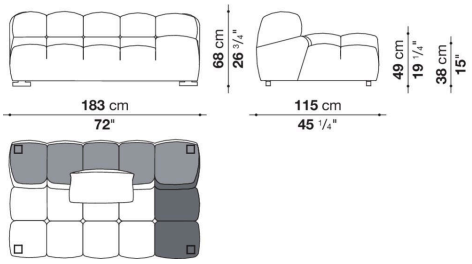

TY115TPS_3

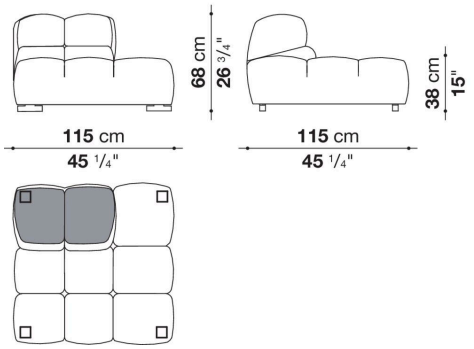

TY115TPD_3

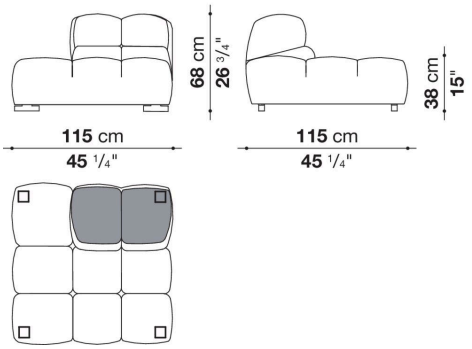

TY115_3S

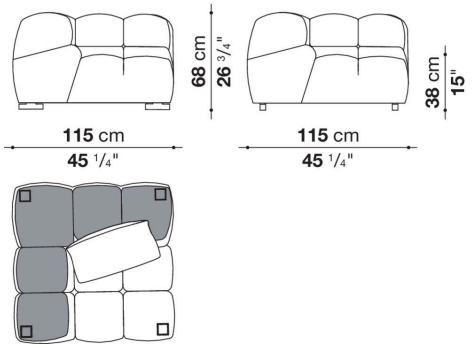

TY115_3D

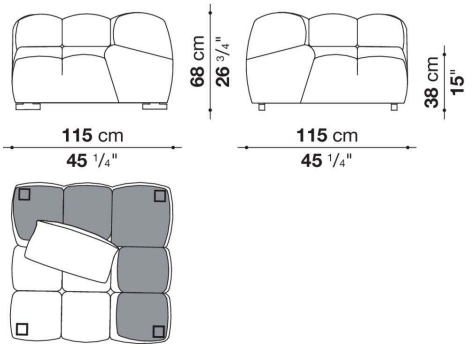

TY108P_3

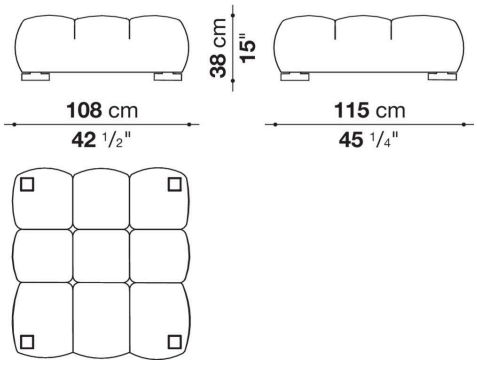

TY140PV_3

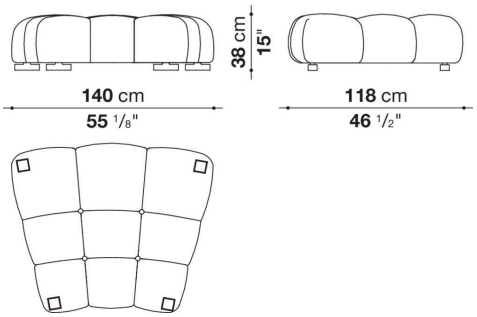

TY60

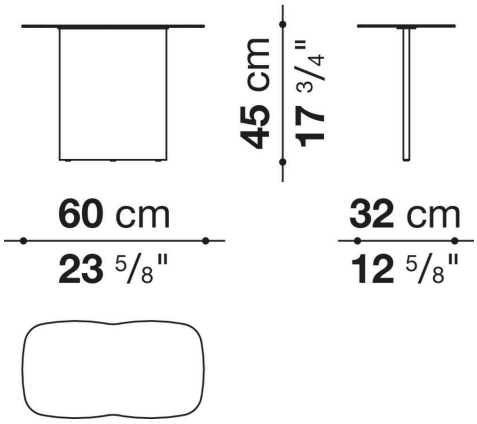
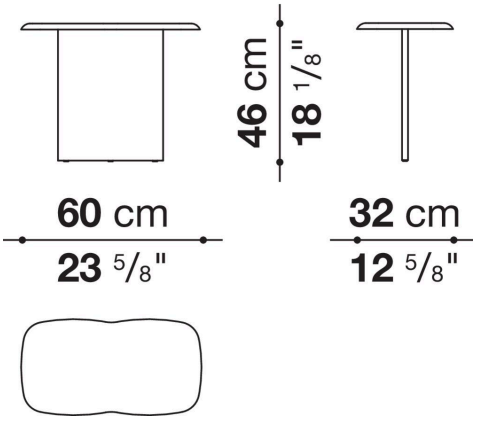
TY60L